Thermo-mechanical analyses of ITER in-vessel magnetic sensor assembly

W. Gonzalez[1], **A. Rizzolo**[1], **S. Peruzzo**[1], **S. Arshad**[2], **M. Portales**[3], **G. Vayakis**[3]

1 Consorzio RFX, Association EURATOM-ENEA, C.so Stati Uniti 4, 35127 Padova, Italy
2 Fusion for Energy, Josep Pla 2, Torres Diagonal Litoral B3, 08019 Barcelona, Spain
3 ITER Organization, Route de Vinon sur Verdon, 13115 St Paul Lez Durance, France

ITER plasma magnetic diagnostics
Pick-up Coils sensors

Sensor name	Signal		Topology	Vessel location	
	Inductive	Stady state		Inner	Outer
Normal Coils	•		Coil		•
Tangential Coils	•		Coil		•
Normal Coils	•		Coil	•	
Tangential Coils	•		Coil	•	
Diamagnetic Compensation	•		Coil	•	
Diamagnetic Compensation	•		Coil		•
Toroidal Coils	•		Coil	•	
Toroidal Coils (Divertor)	•		Coil	•	
Divertor Equilibrium coils	•		Coil	•	
High Frequency Sensors	•		Coil	•	
RWM Sensors	•		Coil	•	

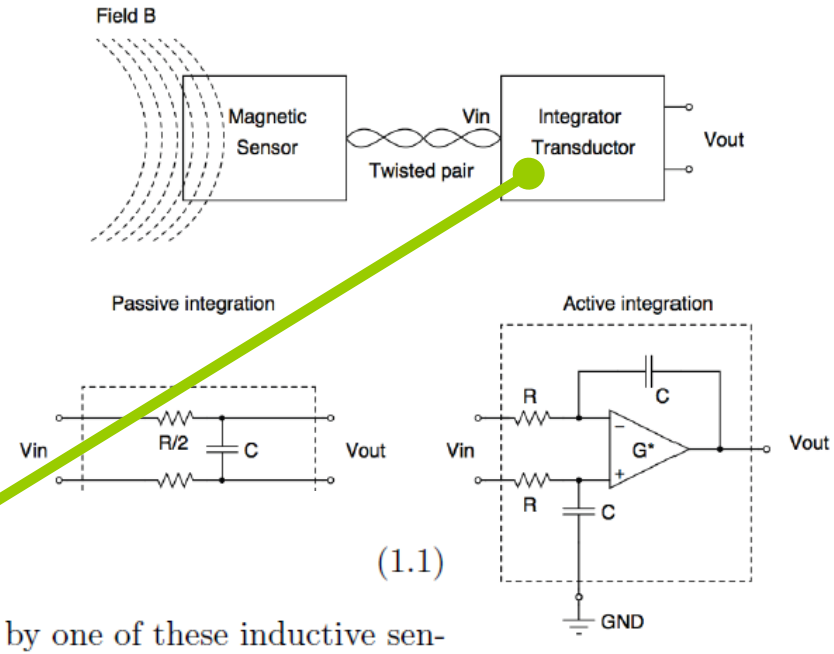

$$\Phi = -\int V\,dt \qquad (1.1)$$

Where Φ denote the magnetic flux linked by one of these inductive sensors and V the *induced emf*.

$$V = -n \cdot \frac{d\Phi}{dt} = -n \cdot A \cdot \frac{dB}{dt} = -\mu_0 \cdot n \cdot A \cdot \frac{dH}{dt} \qquad (1.2)$$

$$V = -\mu_0 \cdot n \cdot A \cdot \frac{dH}{dt} + \Delta V_{Radiation} + \Delta V_{Thermal} + \Delta V_{Mechanical} \qquad (1.3)$$

Winder A. Gonzalez
Università degli studi di Padova - Consorzio RFX, Padova, Italy.

ITER plasma magnetic diagnostics
Pick-up Coils sensors

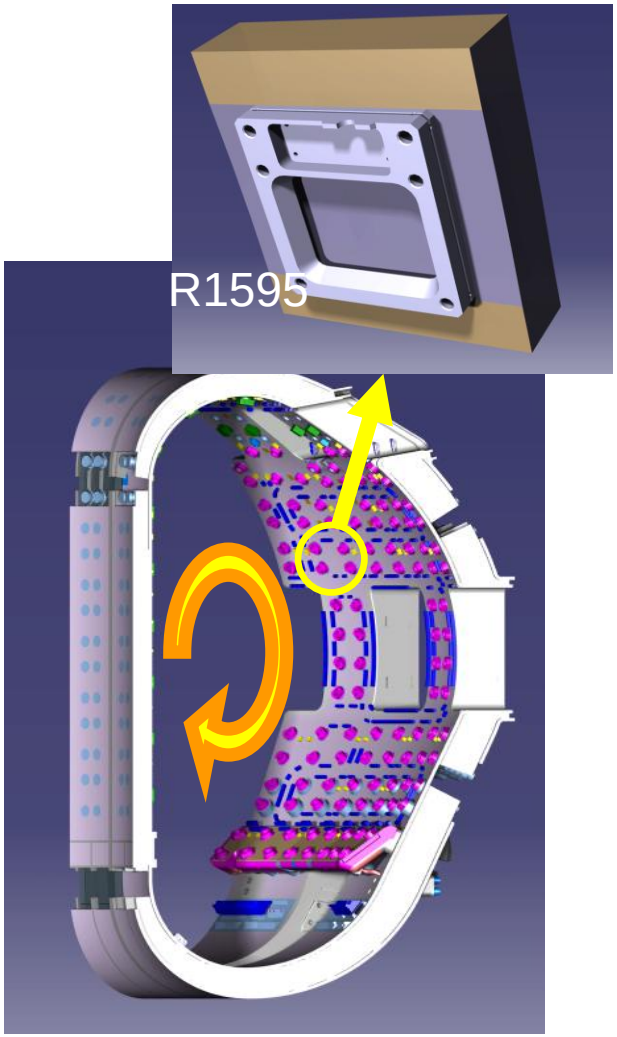

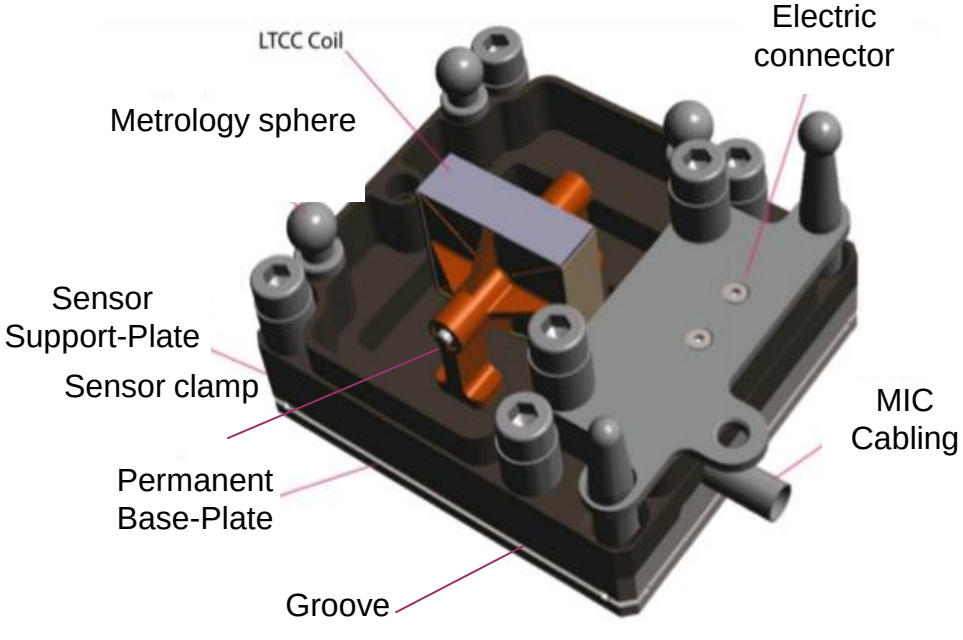

Radiation (Neutrons & Gamma)

↓

Cooling

↓

Sensor assembly & Welding deformation

Winder A. Gonzalez
Università degli studi di Padova - Consorzio RFX, Padova, Italy.

ITER plasma magnetic diagnostics
Pick-up Coils sensors

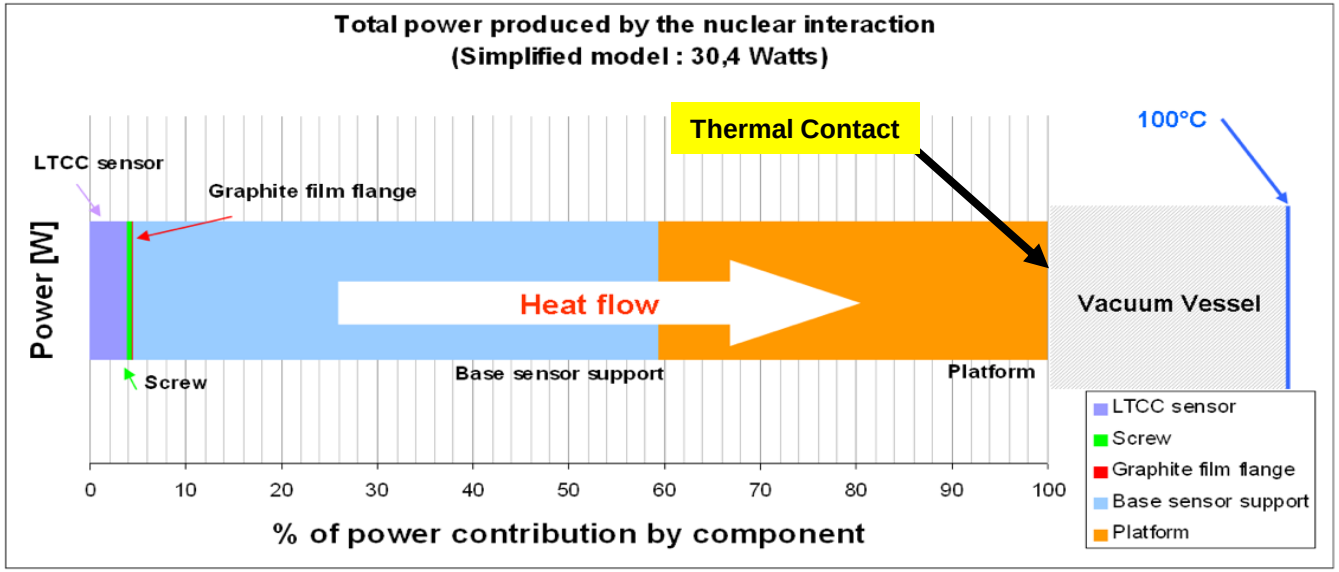

Radiation Effects

Direct radiation effects (nuclear heating and mechanical effects arising from lattice damage and transmutation)

Indirect radiation effects, for instances RIEMF, TIEMF, RITES just to mention only a few of them.

Produce spurious voltages that affect the accuracy of the sensors.

A

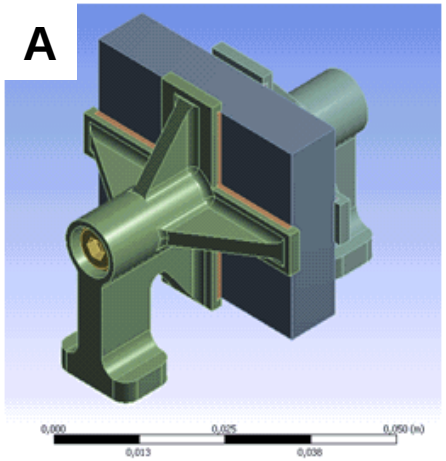

LTCC Sensor

B

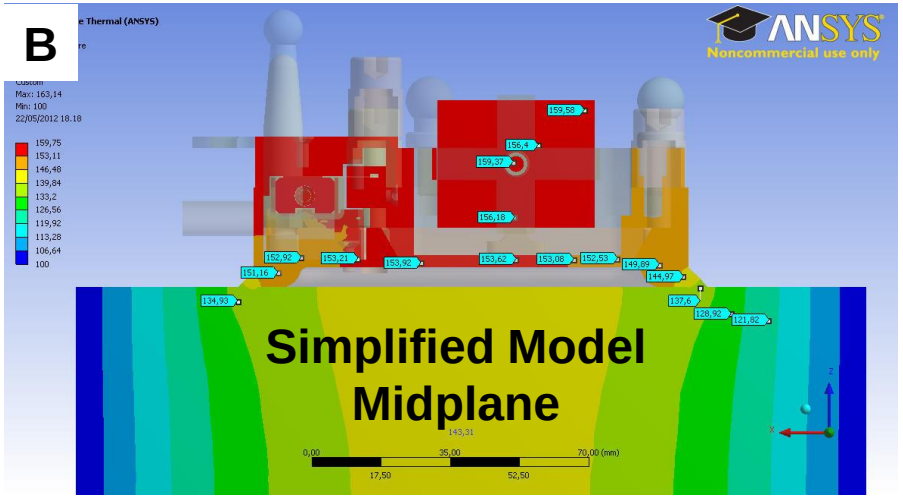

Winder A. Gonzalez
Università degli studi di Padova - Consorzio RFX, Padova, Italy.

Steady State Thermal Analysis on (LTCC) magnetic sensors

The model is refined considering a Coil layer equivalent material (constituted by the sequence of the ceramic and Ag tracks) alternated with pure ceramic inter-layers and the two 0.025 mm thick Ag ground layers. Exploiting symmetry of the geometry and the load condition, only 1/8 is modelled.

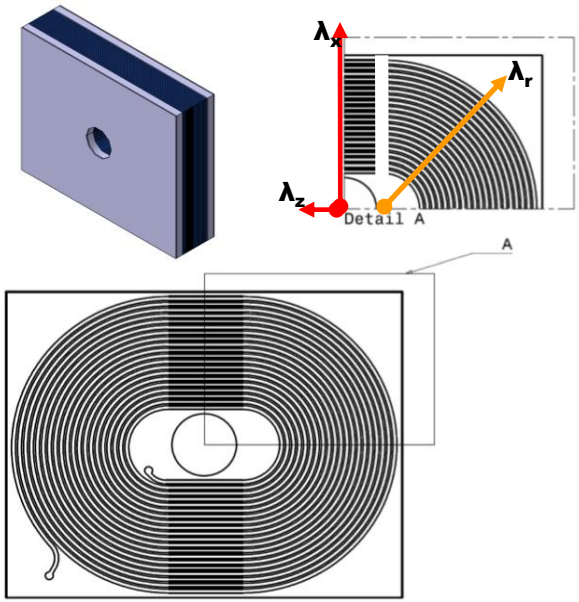

ΔTmax 1,6 °C

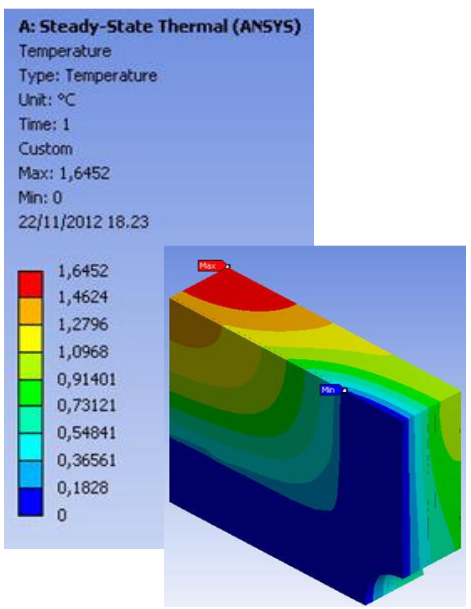

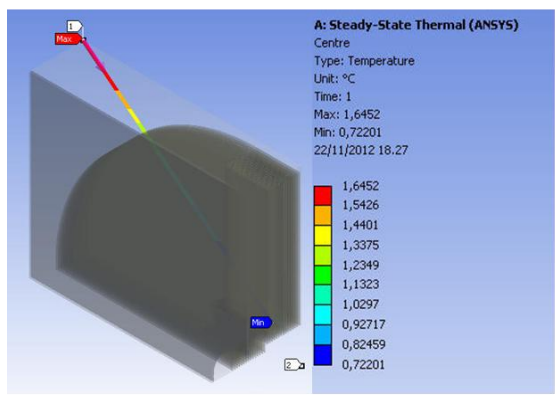

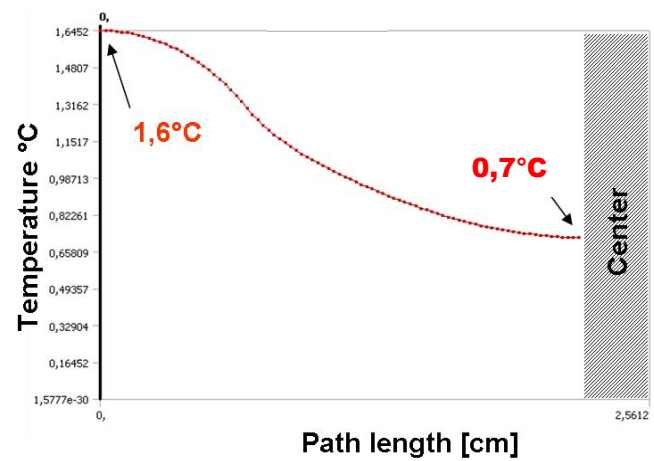

Winder A. Gonzalez
Università degli studi di Padova - Consorzio RFX, Padova, Italy.

Steady State Thermal Analysis on Simplified model

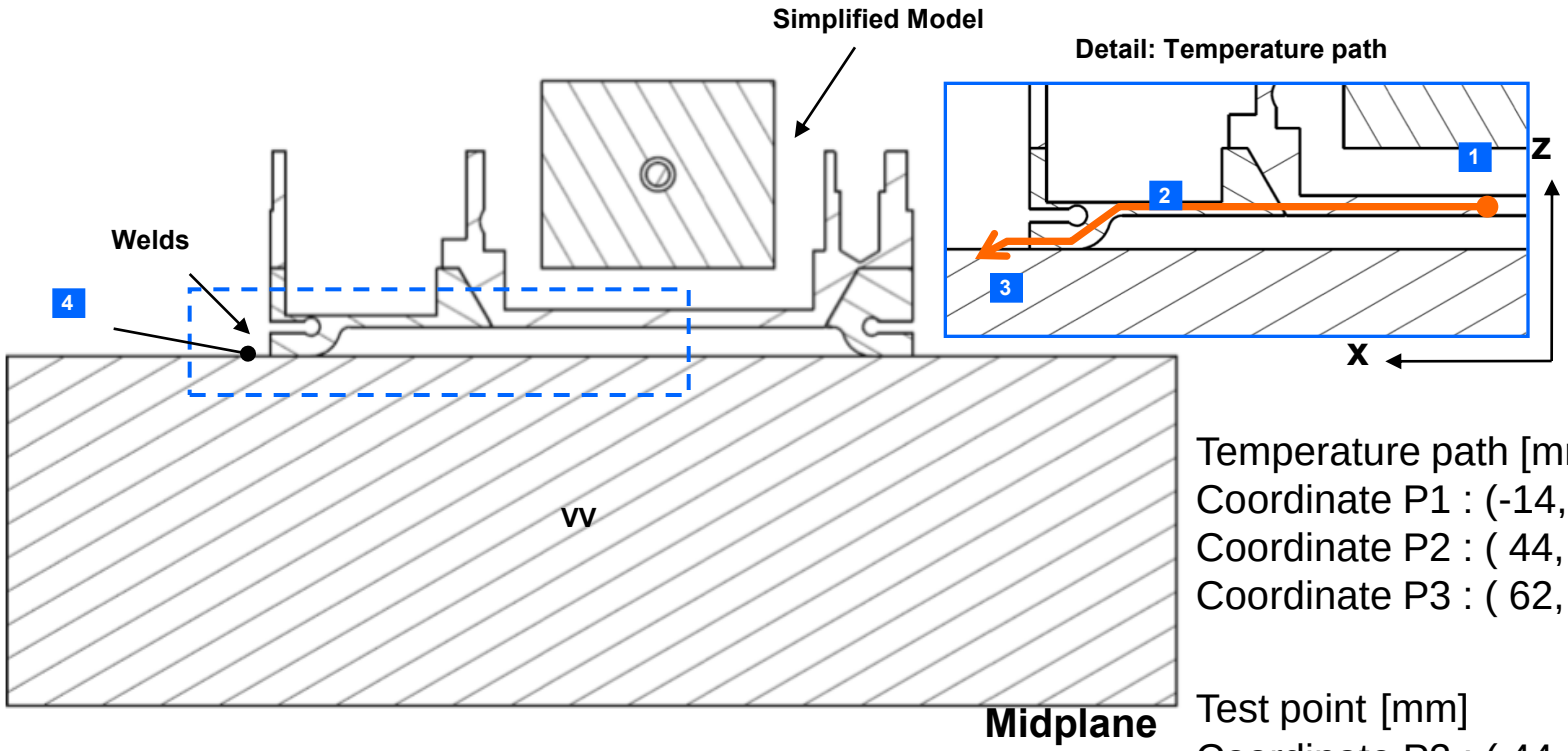

Temperature path [mm]
Coordinate P1 : (-14, 0, 6)
Coordinate P2 : (44, 0, 6)
Coordinate P3 : (62, 0, -5)

Test point [mm]
Coordinate P2 : (44, 0, 6)
Coordinate P4 : (62, 0, 0)
Cordinates related to the global coordinate system

Steady State Thermal Analysis on Simplified model

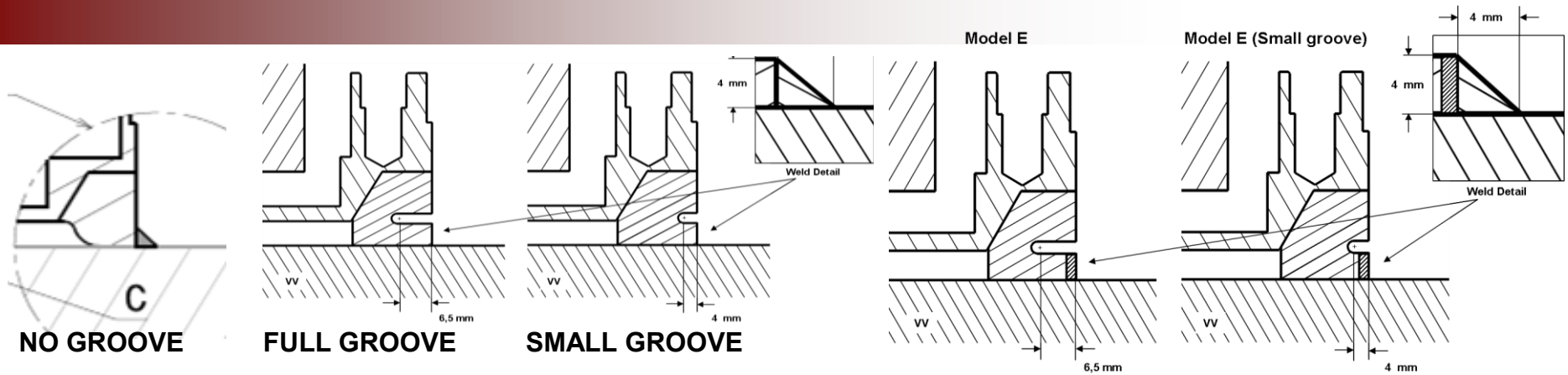

Simulation 8 (S8)

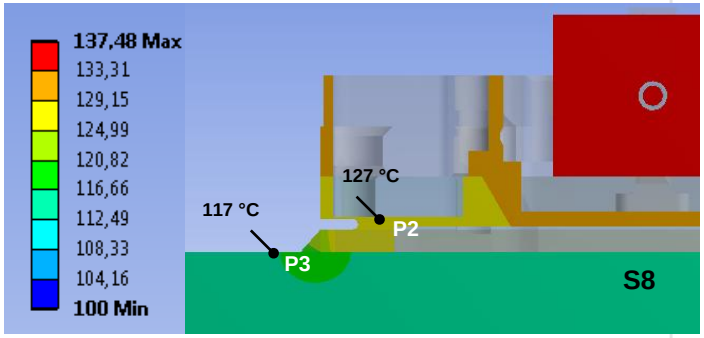

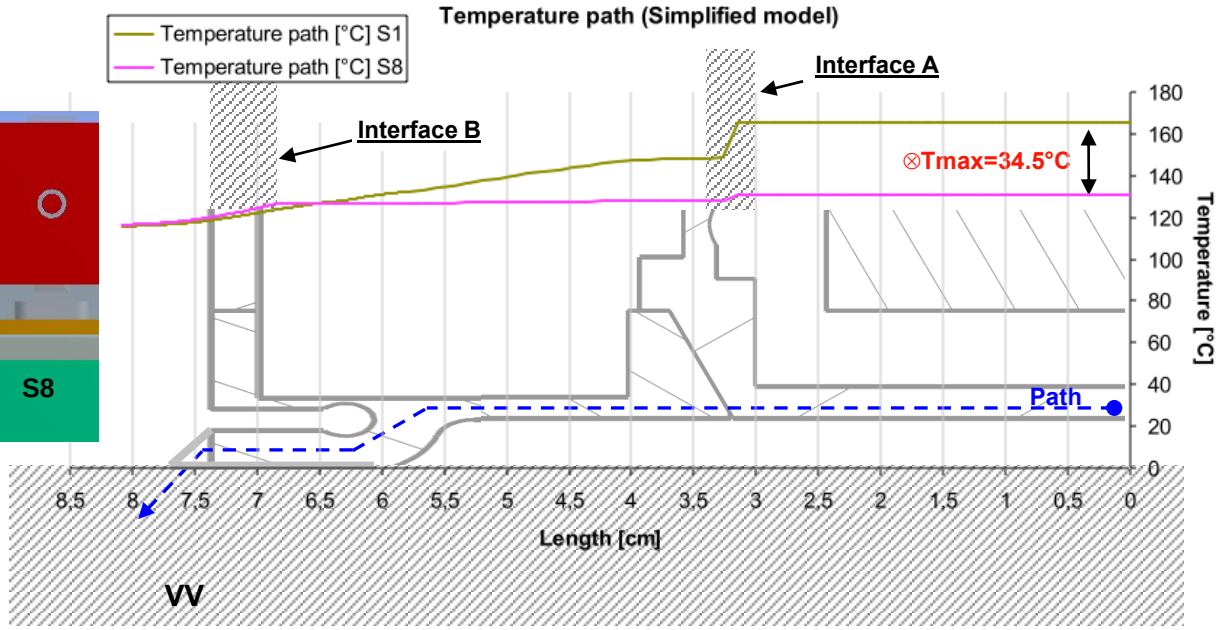

Winder A. Gonzalez
Università degli studi di Padova - Consorzio RFX, Padova, Italy.

Results : Steady State Thermal Analysis on Simplified model

The reason of this result is ascribable to the “thermal bottleneck” provided by the terminal part of the Base-Plate “foot” (in particular the SS ring and the fillet weld), which implies an equivalent thermal resistance in the various models of the Base-Plate, which must dissipate similar heat flux. In terms of the internal heat generation (about 12W in the SS case), the power produced by the neutrons on the Cu Base-Plate doesn't change excessively, as it is increased only of 0.5 W (about 5%).

Temperature path

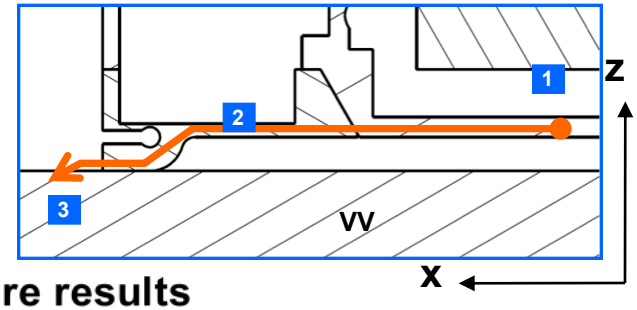

Temperature results

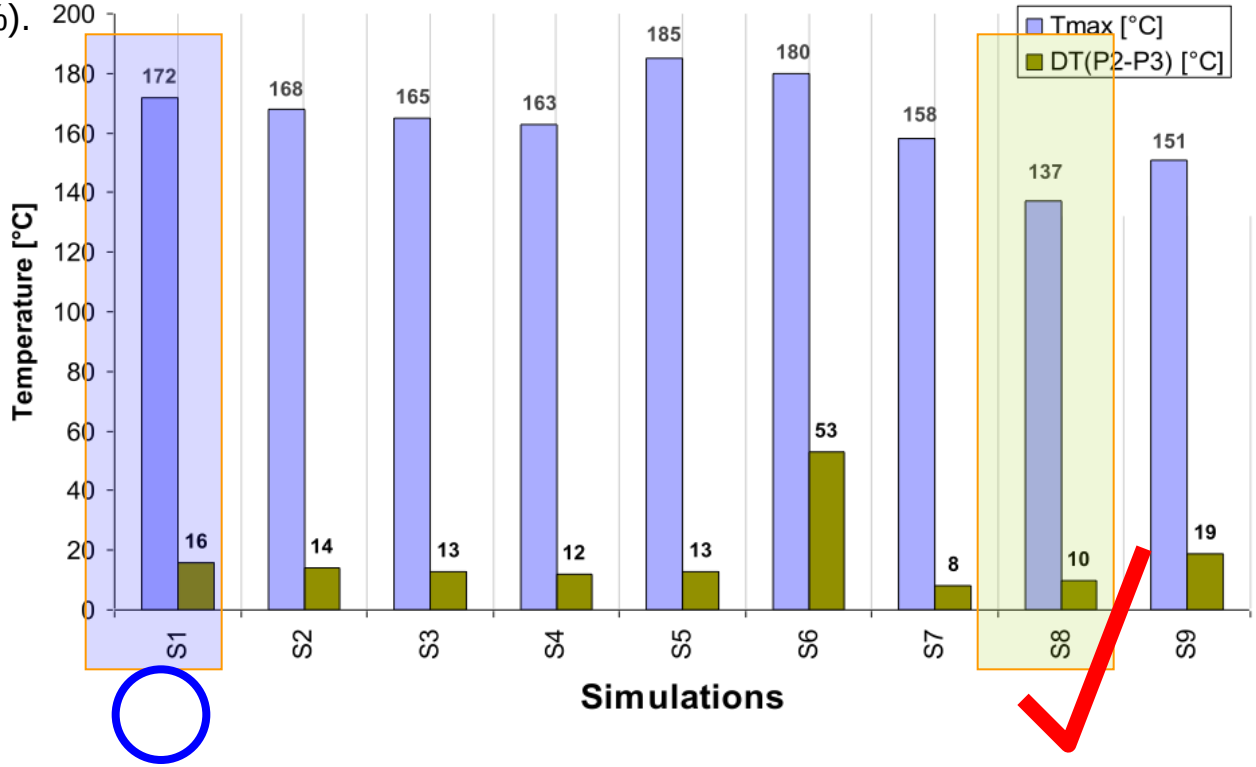

Winder A. Gonzalez
Università degli studi di Padova - Consorzio RFX, Padova, Italy.

Cu/SS permanent Base-Plate deformation induced by welding to the VV with real curvature

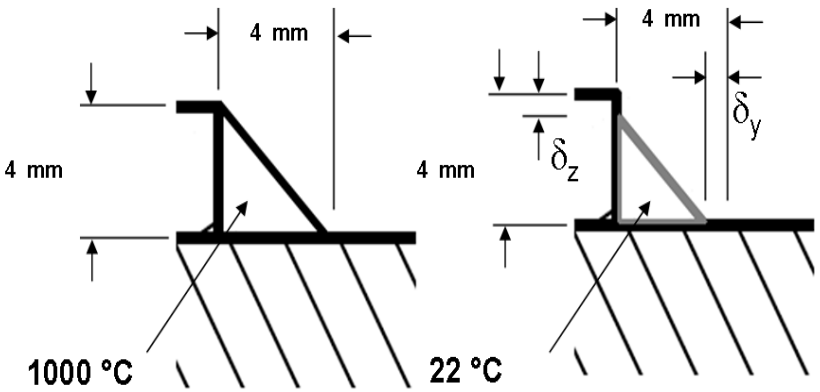

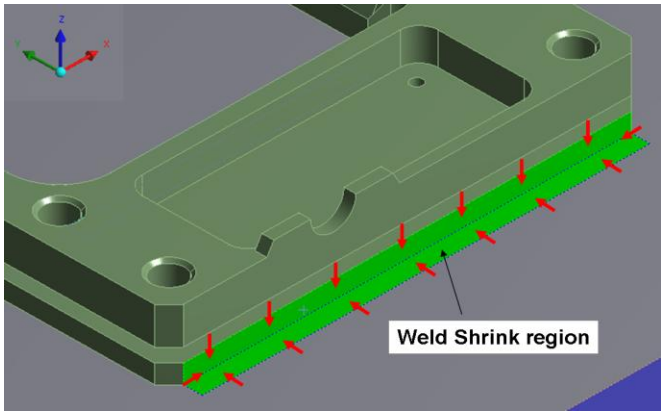

Thermal shrinkage of the welds during solidification

Before

After

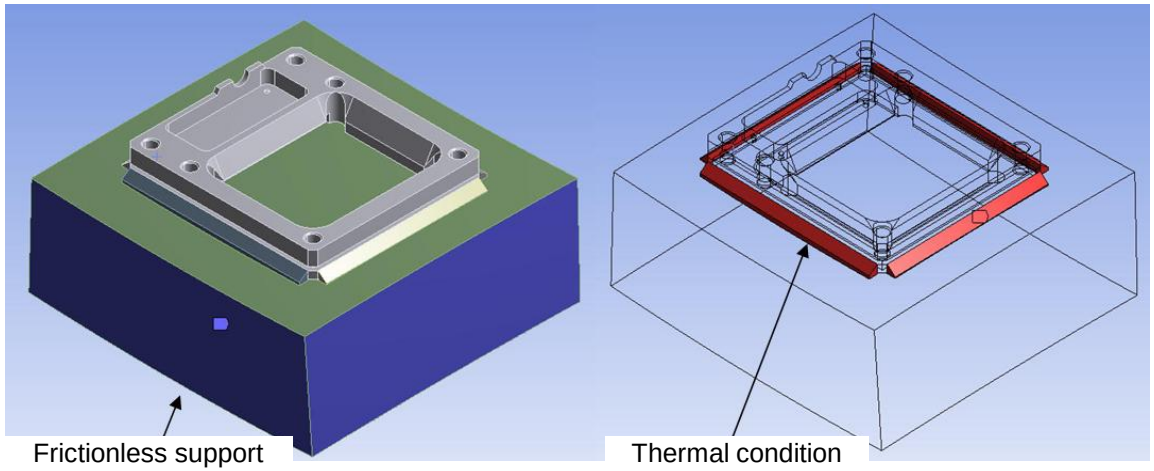

Thermal condition and support boundary conditions

Winder A. Gonzalez
Università degli studi di Padova - Consorzio RFX, Padova, Italy.

Results: Cu/SS permanent Base-Plate deformation induced by welding to the VV with real curvature

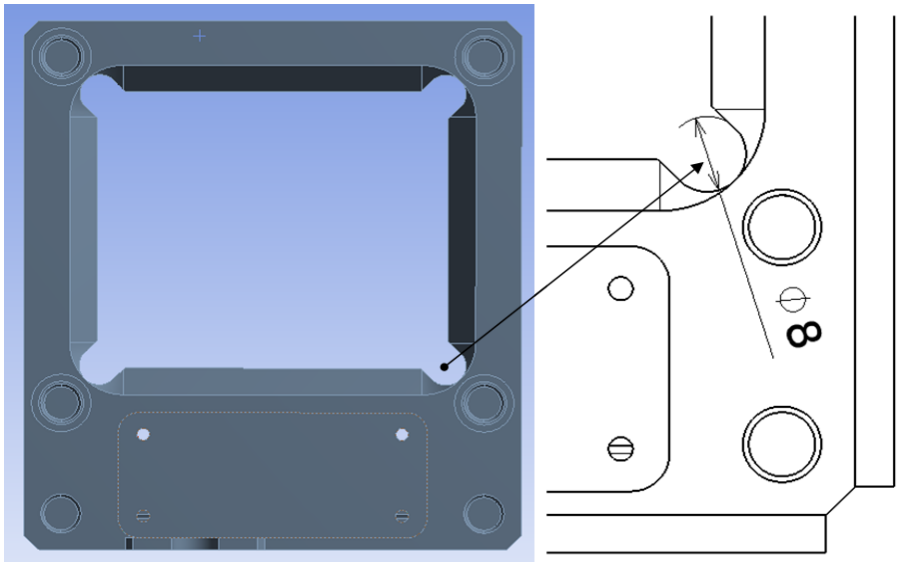

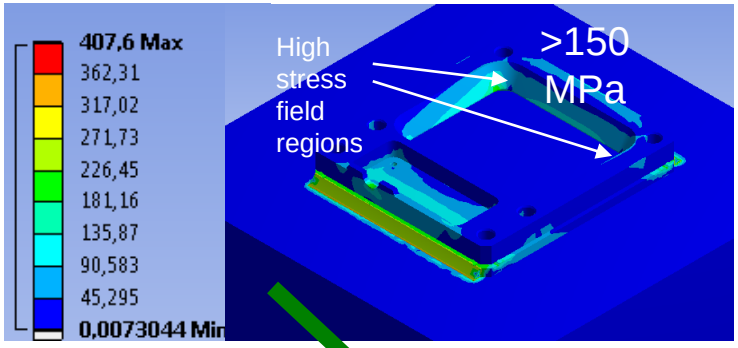

IMPROVEMENT

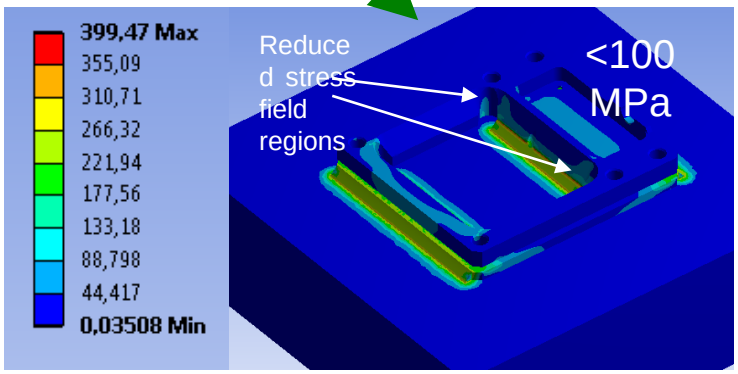

Von Mises stress reduction after wedge corner removal

All the analyzed models are characterized by a common modification: four circular pockets in correspondence of the internal corners of the Base-Plate frame have been implemented. The aim was to reduce the stress concentration in those areas.

Winder A. Gonzalez
Università degli studi di Padova - Consorzio RFX, Padova, Italy.

Results: Cu/SS permanent Base-Plate deformation induced by welding to the VV with real curvature

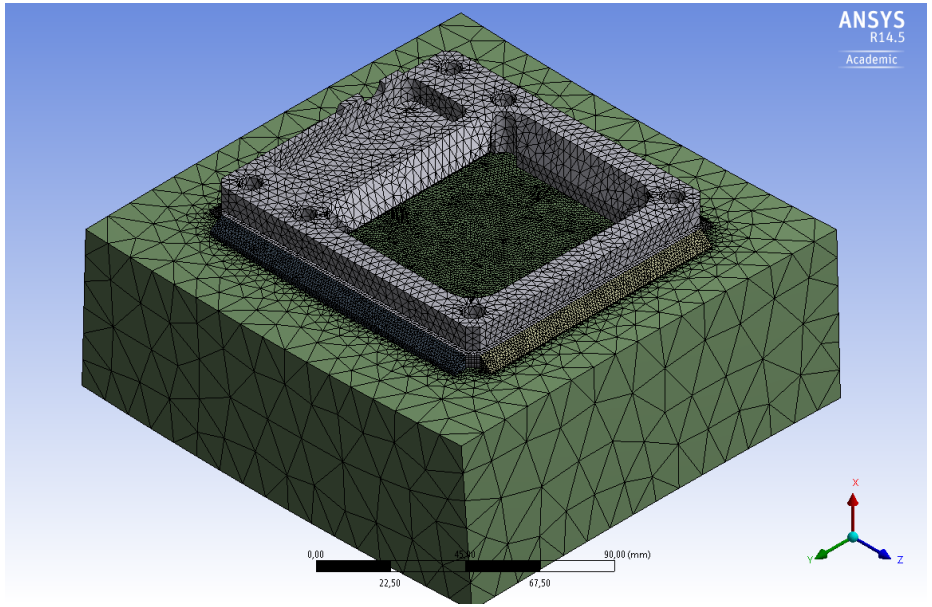

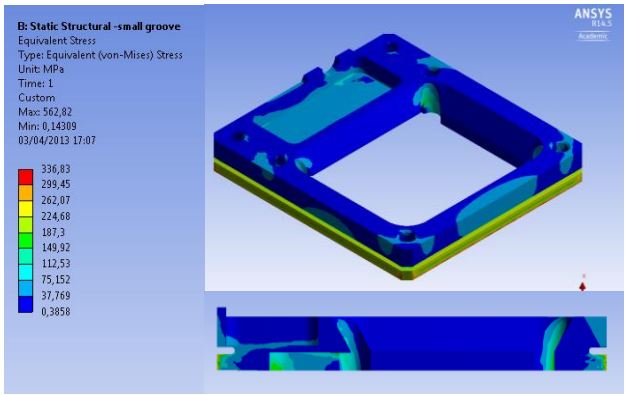

Equivalent Stress in base plate (small groove case)

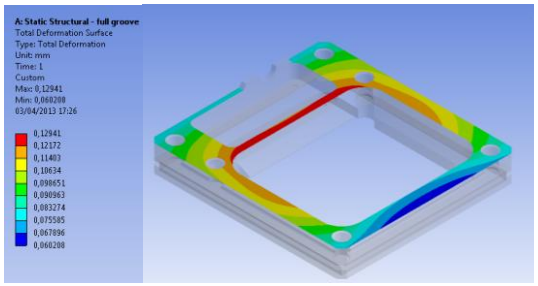

Total deformation on reference plane (full groove case)
δ_{Max} =0.13 mm ; δ_{Min} =0.06 mm

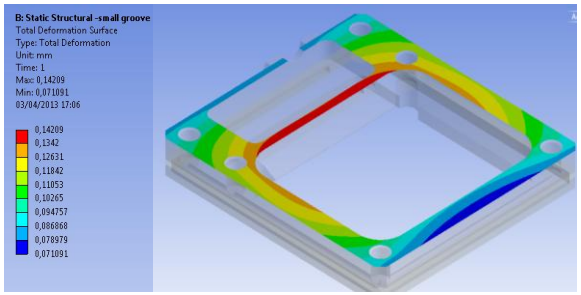

Total deformation on reference plane (small groove case)
δ_{Max} =0.14 mm ; δ_{Min} =0.07 mm

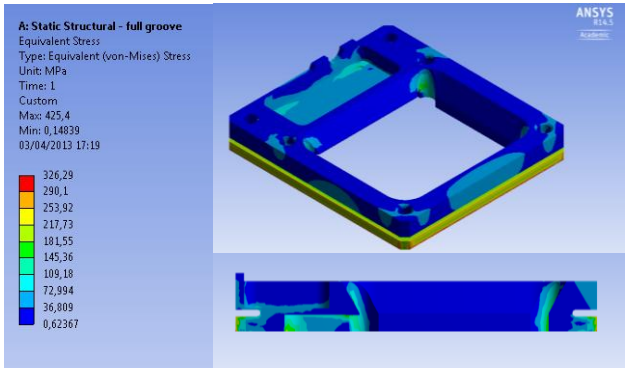

Equivalent Stress in base plate (full groove case)

Winder A. Gonzalez
Università degli studi di Padova - Consorzio RFX, Padova, Italy.

Conclusions

•The thermal assessment of the cross shaped sensor clamp with a detailed LTCC modelling demonstrated that the **thermal gradients within the sensor are sufficiently small (< 2 K)** to generate a negligible TIEMF in the pick-up coil.

•A new FEM model has been adopted in the simulation of the components that included a portion of the Vacuum Vessel and the welds connecting the permanent Base-Plate.

•The survey of possible design modification allowed the identification of proper solutions for efficient cooling of components with low temperature gradient (acceptable TIEMF on MIC cables) and mechanical optimisation of stress and deformation induced by welding.

•In particular it is demonstrated that **the 4 side welds are necessary** because they assure the best heat transfer performance (**ΔT 'Base Plate connector' – 'VV' ~ 10 K**) with an acceptable mechanical distortion (**deformation of Base-Plate reference plane < 0.1 mm**).

This report summarises the design progress, carried out in the framework of the **F4E-GRT-155**, of the ITER in-vessel magnetic discrete sensors, starting from the results highlighted in the document "Conceptual Design Report of ITER in-vessel magnetic discrete sensors", where a new cross shaped magnetic sensor support was proposed.

Next Steps

(LTCC) Sensors **procurement**

- Magnetic, electrical and mechanical characterization.
- Irradiation test (Measurements of **RIEMF and TIEMF** effects)
- Post-Irradiation characterization.

R&D of Resistance Spot Welding tests (Remote handling)

- Electrical testing:
- Electrical resistance measurement with high resolution Multimeter

- Mechanical testing:
- Traction test (with dynamometer) or tearing test