Use of a triple probe to measure non-repeating plasma phenomena in HiPIMS

FuseNet 2015

F Lockwood Estrin and J W Bradley

fble500@liv.ac.uk

Department of Electrical Engineering and Electronics
University of Liverpool
Brownlow Hill
Liverpool
L69 3GJ

Abstract

The Langmuir probe is one of the most common and useful plasma diagnostic. It using a sweeping voltage, applied to a wire inside the plasma and is able to give accurate readings of electron temperature, ion/electron density, as well as floating and plasma potential.

The technique takes a finite time (~100 μs). This means that short lived phenomena, such as those observed in fusion or HiPIMS (High Power Impulse magnetron Sputtering), can't be investigated using Langmuir probes. However for these situations a triple probe can be used. The triple probe uses three biased probes inside the plasma and is able to give the same results as a Langmuir probe, effectively instantaneously.

Below is discussed the triple-probe theory, testing in an industrial plasma and it's use to measure electron temperature and ion density in Spokes a HiPIMS phenomena that has pervoiusly been impossible to measure.

Triple probe theory

Triple probe theory was derived in 1965[1], as a method to calculate the electron temperature and density using fixed voltages, derived from the plasma-surface interaction equations for $I_p(V_b)$, the current to a probe of bias V_b in a plasma (equation 1)[2].

$$(1)\ I_p(V_B) = I_{esat}\exp[-e(V_p-V_B)/kT_e] - I_{isat}$$

Where V_p is the plasma potential, T_e is the electron temperature, I_{esat} and I_{isat} are the electron and ion saturation current. If three probes are connected as shown in Fig. 1 (a), then the current through each probe is given by equations 2 (a)-(c).

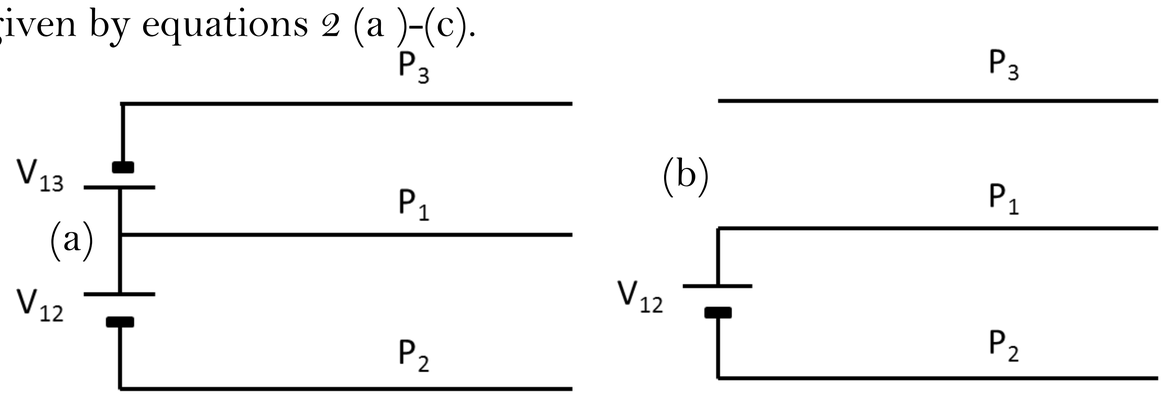

Figure 1. showing the triple probe setups, for (a) current mode and (b) voltage mode[3].

$$(a)\ I_1(V_B) = I_{esat}\exp[-eV_{p1}/kTe] - I_{isat}$$
$$2(b)\ I_2(V_B) = I_{esat}\exp[-e(V_{p1}-V_{12})/kT_e] - I_{isat}$$
$$(c)\ I_3(V_B) = I_{esat}\exp[-e(V_{p1}-V_{13})/kT_e] - I_{isat}$$

Where V_{p1} is the potential difference between V_1 and the V_p. By combining these equations we get equation 3, which can be solved numerical to give electron temperature from measurable values.

$$(3)\ \frac{I_1-I_3}{I_1-I_2} = \frac{1-\exp(eV_{13}/kT_e)}{1-\exp(eV_{12}/kT_e)}$$

Alternately we can use the setup shown in Fig. 1 (b) the voltage mode. In voltage mode $I_3 = 0$ therefore $I_2 = -I_1$ further simplify can be achieved if we set $V_{12} >> kT_e/e$ so that $I_1 = I_{isat}$. Using these simplification results in get equation 4.

$$(4)\ kT_e/e = (V_{13})\ln(1/2)$$

Using this equation we can calculate the electron temperature and combine with our measured I_{isat} to get electron/ion density.

Testing and measurements

Both the methods in Fig. 1 have advantages and disadvantages. The current mode, Fig. 1(a), is more technically difficult in setup and analysis. However, the floating probe (voltage mode) is especially venerable to noise pick-up. The voltage mode, Fig 1(b) was used here, however to reduce noise the a set of potential divider to a unified ground were used, shown in Fig 2.

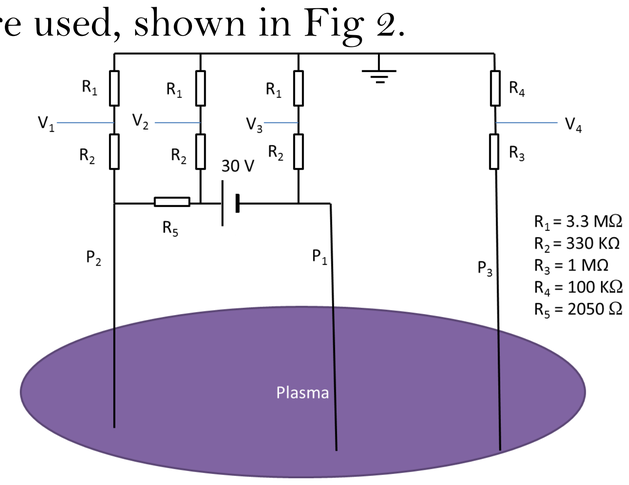

Figure 2. The circuit diagram for the triple probe used.

The motivation for using the triple probe rather than a Langmuir is to investigate spokes in a HiPIMS plasma. Spokes occur randomly on a time scale of ~10 μs[4], this makes them impossible to investigate with traditional Langmuir systems.

The triple probe was first tested against a Langmuir probe, with both average over the same period. These results are shown in Fig 3 (a).

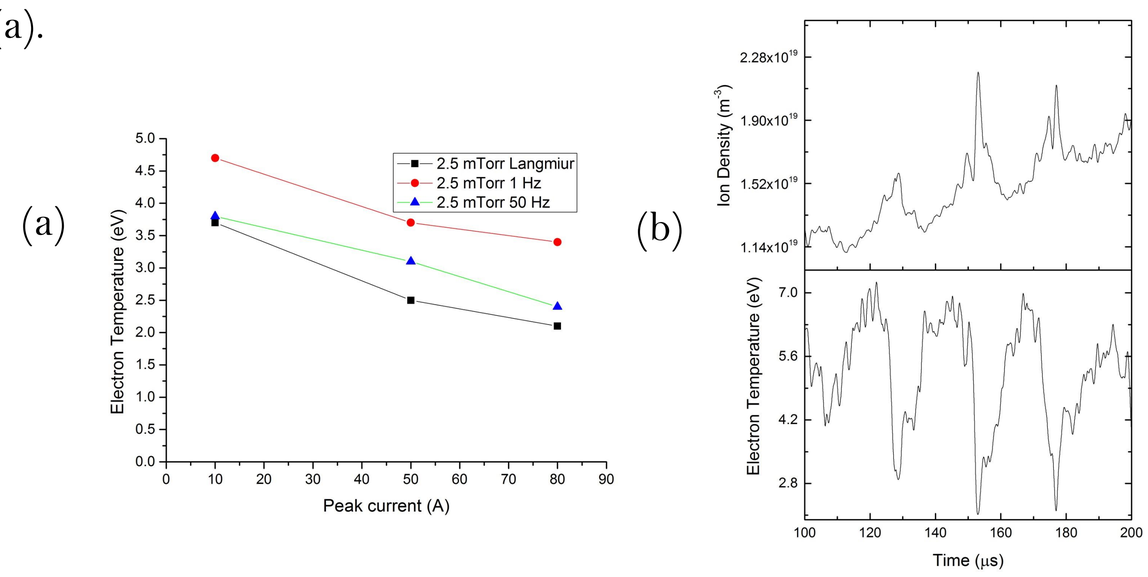

Figure 3. The triple probe measured electron temperature in HiPIMS (a) compared to the Langmuir probe (b) co-plotted with electron temperature for Spokes.

Having validated the triple probe results, it can then be used to investigate spokes with confidence. This gives the results in Fig 3 (b), showing the Spokes effect on the electron temperature and ion density, this result has never before been observed.

The support of the Engineering and Physical Sciences Research Council for the Fusion Doctoral Training Network (Grant EP/H012605/1) is gratefully acknowledged. As is TJ petty who provided me with the template for this poster.

References

[1]S. Chen and T. Sekiguchi. *J. Appl. Phys.* **36** (1965) 8.
[2] R. L. Merlino *Am. J. Phys* **75** (2007) 12 1078.
[3] J. Chang and M. Kamitsuma. *Planet. Space. Sci.* **25** (1977) 973.
[4] N. Benning and D. Lundin *Phys. Plasmas.* **19** (2012) 093505.